8-1/8" wide x 7-9/16" height

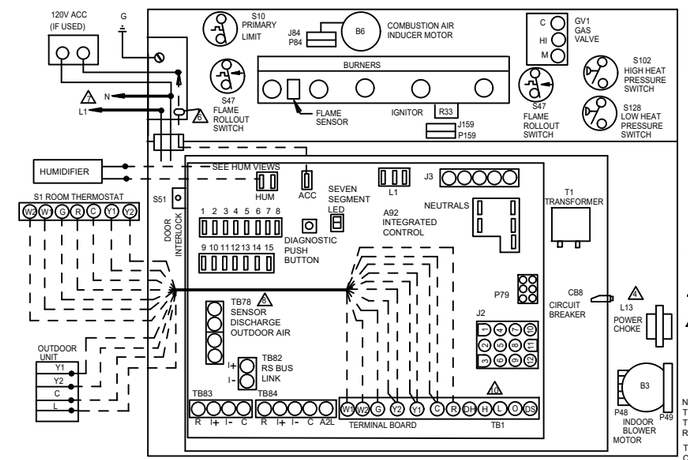

BLOWER SPEED CHART				
UNIT	FACTORY SHIPPED SETTINGS			SECONDARY LIMITS USED
	HEAT	COOL	ADJUST	
135XV60C	FACTORY DEFAULT	HIGH	FACTORY DEFAULT	0

Program unit capacity/size		
Character on 7-segment LED (w dot ON)	Furnace Model	Circulator Motor Size
7	135XV60C	1 HP

24VAC HUMIDIFIER — TO C; TO R OR H ON CS7000; HUM AT IFC

120VAC HUMIDIFIER — TO N; TO L1; HUM AT IFC

1. CUT W914 JUMPER LABELED "DEHUM OR HARMONY" FROM DS TO R, AT A92 CONTROL BOARD, WHEN USED WITH Comfortsense 7000 THERMOSTAT
2. CUT W951 JUMPER FROM O TO R, LABELED "HEAT PUMP", AT A92 CONTROL BOARD, WHEN USED FOR DUAL FUEL APPLICATIONS
3. JUMPER W915 FROM Y1 TO Y2 IS FACTORY INSTALLED AT A92 CONTROL BOARD. LEAVE IN FOR ONE STAGE COOL THERMOSTAT. CUT JUMPER Y1 TO Y2 FOR TWO STAGE COOL THERMOSTAT.

THERMOSTAT HEAT ANTICIPATION SETTING	
.65 AMP	HONEYWELL VALVE
.43 AMP	WHITE RODGERS VALVE

NOTE: SEE INSTALLATION INSTRUCTIONS FOR PROCEDURE TO SET CORRECT BLOWER SPEED FOR SPECIFIC COOLING TONNAGE BEING APPLIED, AND HEATING TEMPERATURE RISE DESIRED.

TYPICAL SYSTEM SHOWN FOR 2 HEAT/2 COOL WITH A CONVENTIONAL THERMOSTAT. SEE INSTALLATION INSTRUCTIONS FOR CONNECTIONS TO OTHER EQUIPMENT AND ACCESSORIES.

1. L13 USED ON 3/4 AND 1 HP ONLY
2. DIP SWITCH FACTORY DEFAULT IS FOR A TWO STAGE THERMOSTAT
3. FIELD SUPPLIED ACC WIRE
4. USE COPPER CONDUCTORS ONLY
5. DISCHARGE AND OUTDOOR AIR TERMINALS ARE FOR icomfort USE ONLY
6. THERMOSTAT CONNECTIONS ARE FOR NON-COMMUNICATING SYSTEM ONLY. REFER TO icomfort INSTALLATION INSTRUCTIONS FOR COMMUNICATING SYSTEMS.
7. DH AND L TERMINALS ARE ONLY USED WITH icomfort THERMOSTAT

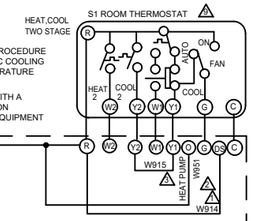

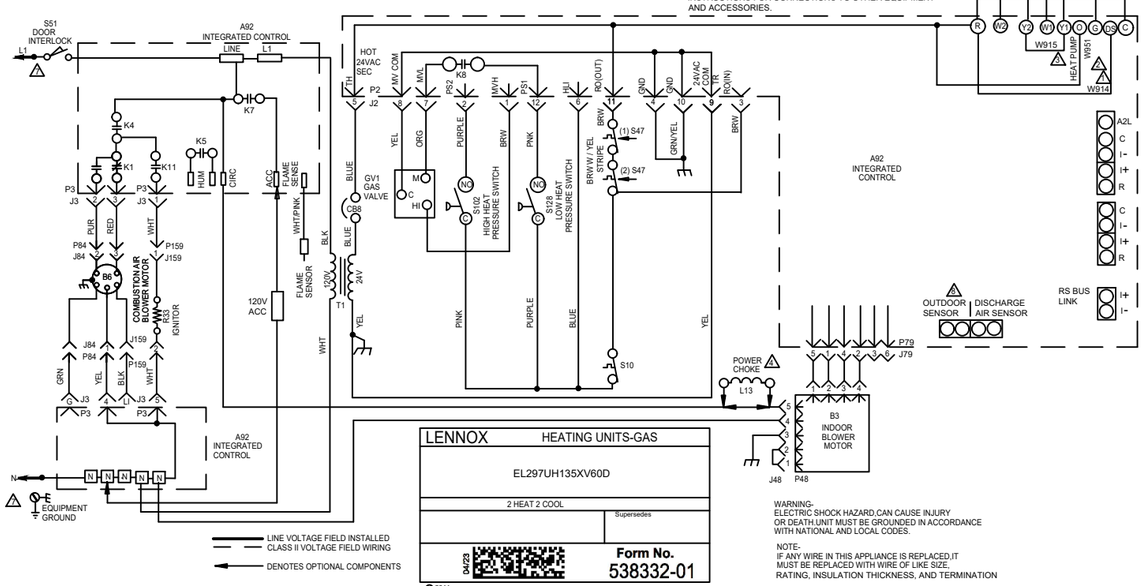

LINE VOLTAGE FIELD INSTALLED
CLASS II VOLTAGE FIELD WIRING
DENOTES OPTIONAL COMPONENTS

LENNOX	HEATING UNITS-GAS
EL297UH135XV60D	
2 HEAT 2 COOL	
	Supersedes
04/23	Form No. 538332-01

©2011
Litho U.S.A.

WARNING-
ELECTRIC SHOCK HAZARD.CAN CAUSE INJURY OR DEATH.UNIT MUST BE GROUNDED IN ACCORDANCE WITH NATIONAL AND LOCAL CODES.

NOTE-
IF ANY WIRE IN THIS APPLIANCE IS REPLACED,IT MUST BE REPLACED WITH WIRE OF LIKE SIZE, RATING, INSULATION THICKNESS, AND TERMINATION